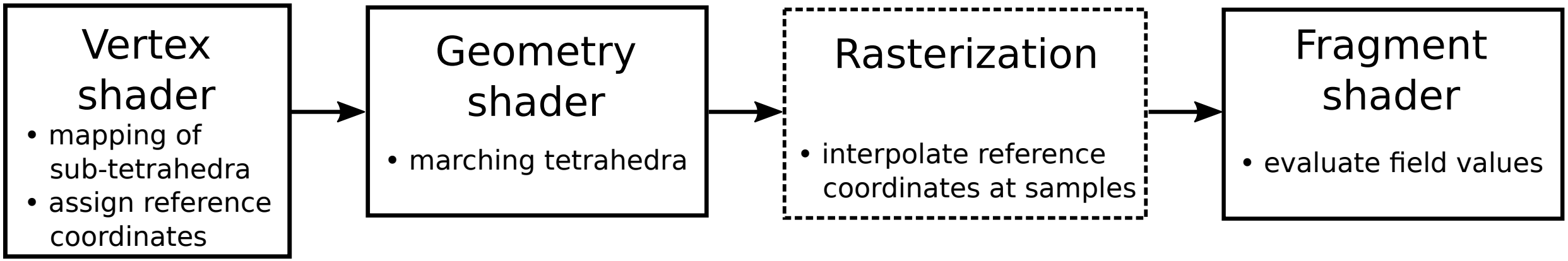
Vertex shader
• mapping of sub-tetrahedra
• assign reference coordinates
Geometry shader
• marching tetrahedra
Rasterization
• interpolate reference coordinates at samples
Fragment shader
• evaluate field values